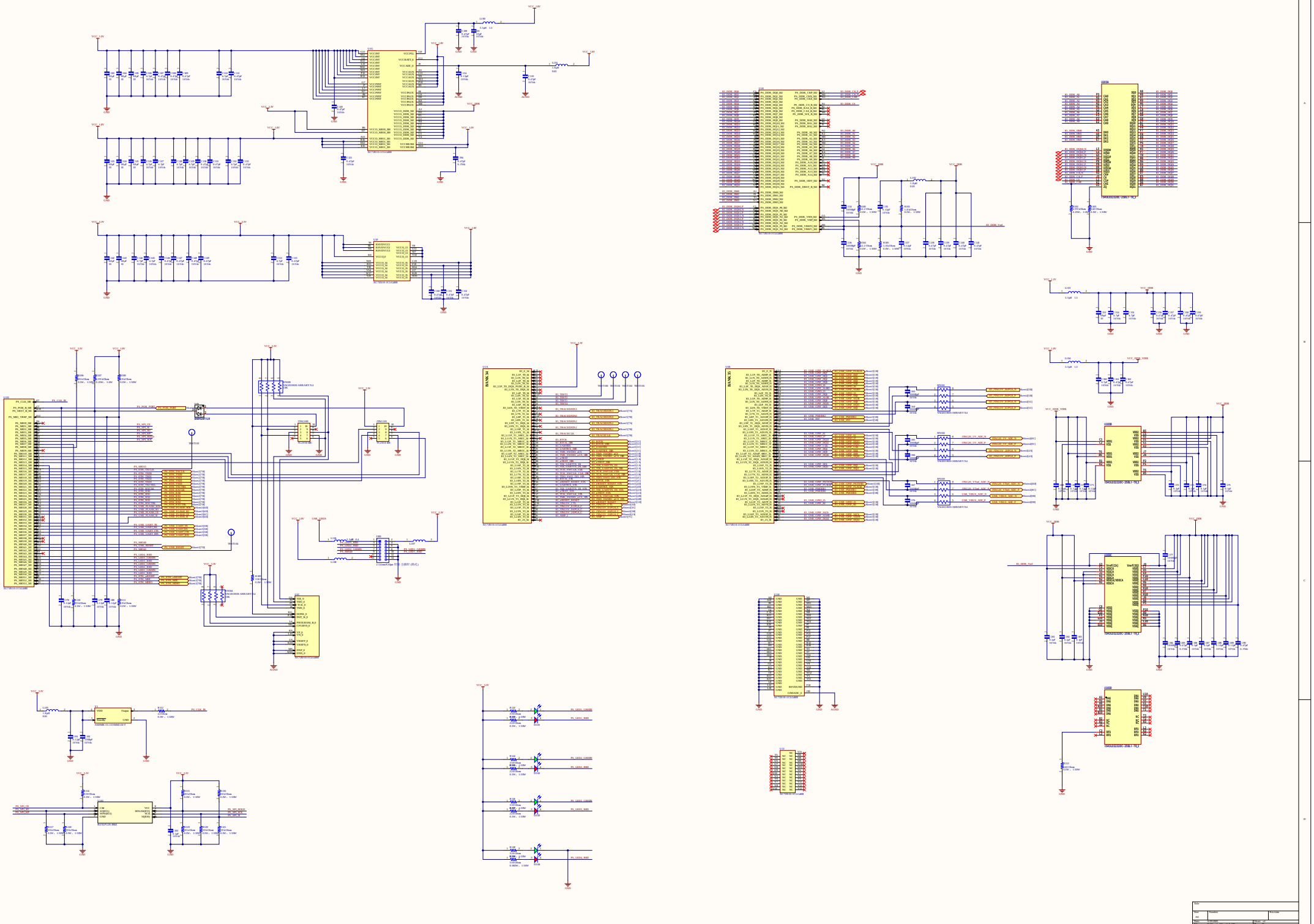

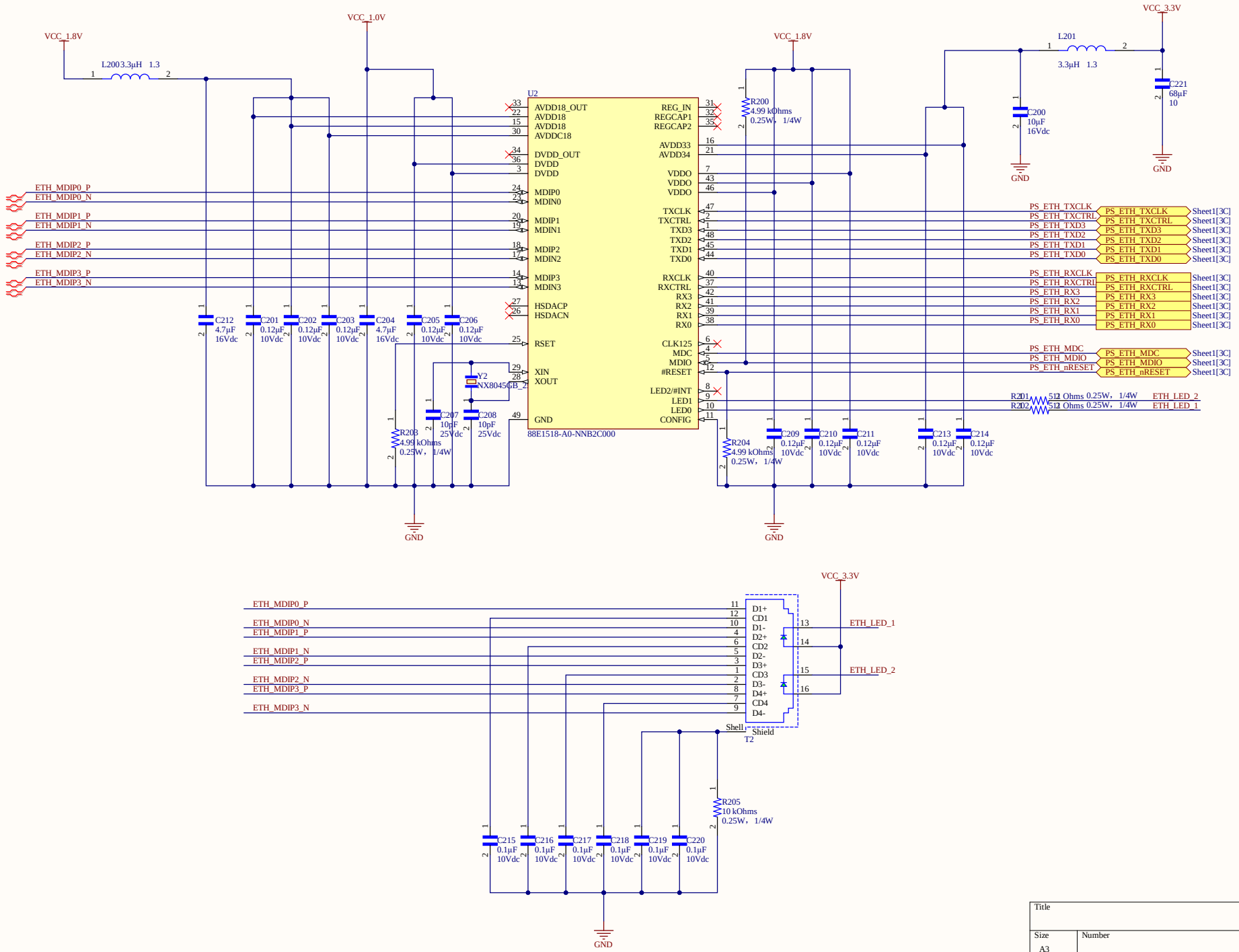

Title		
Size A3	Number	Revision
Date: 9/09/2025		Sheet of
File: C:\Users\..\Sheet2.SchDoc		Drawn By:

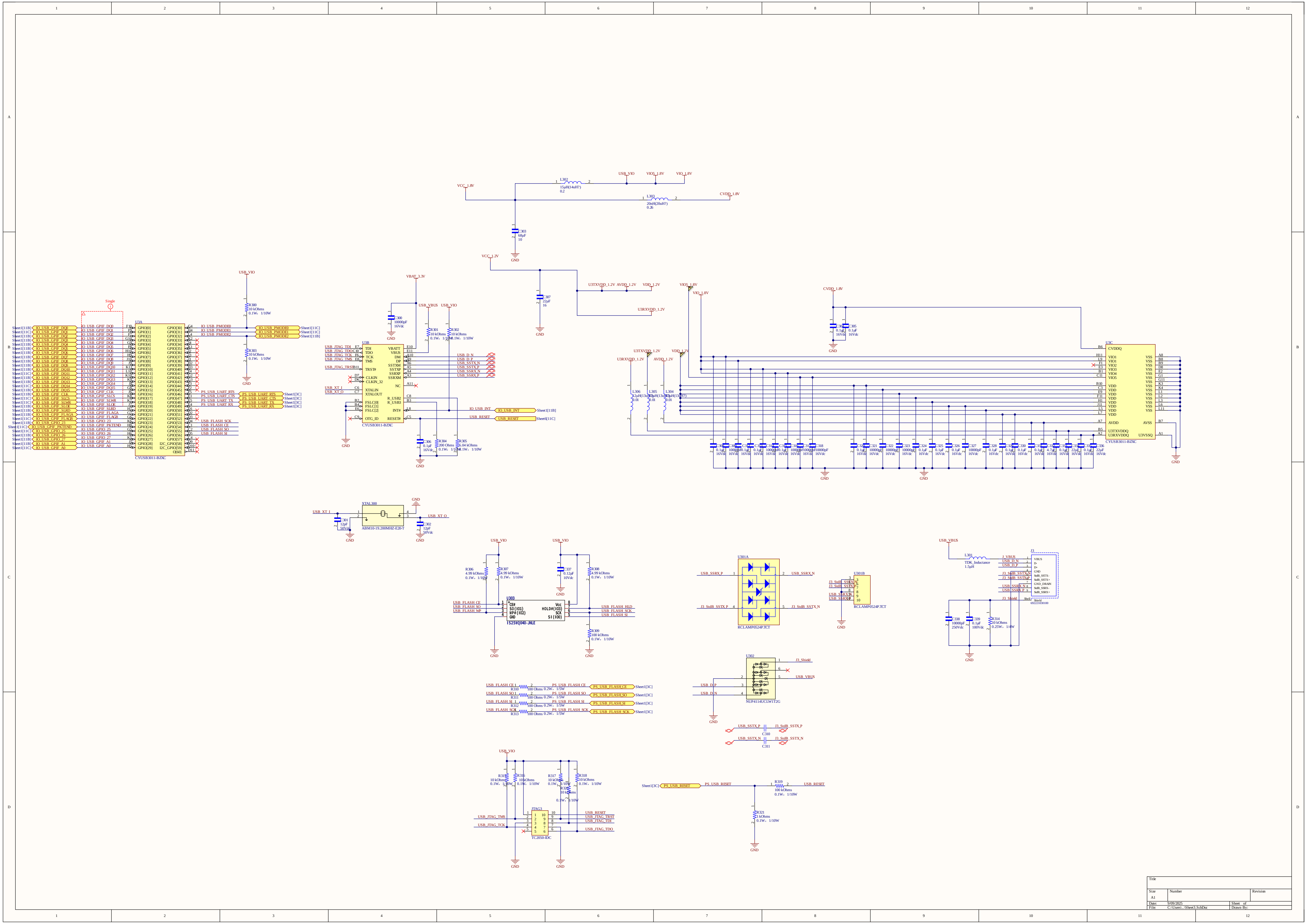
U3A
CYUSB3011-BZXC
Single
IO_USB_GPIF_DQ0
IO_USB_GPIF_DQ1
IO_USB_GPIF_DQ2
IO_USB_GPIF_DQ3
IO_USB_GPIF_DQ4
IO_USB_GPIF_DQ5
IO_USB_GPIF_DQ6
IO_USB_GPIF_DQ7
IO_USB_GPIF_DQ8
IO_USB_GPIF_DQ9
IO_USB_GPIF_DQ10
IO_USB_GPIF_DQ11
IO_USB_GPIF_DQ12
IO_USB_GPIF_DQ13
IO_USB_GPIF_DQ14
IO_USB_GPIF_DQ15
IO_USB_GPIF_CLK
IO_USB_GPIF_SLCS
IO_USB_GPIF_SLWR
IO_USB_GPIF_SLOE
IO_USB_GPIF_SLRD
IO_USB_GPIF_FLAGA
IO_USB_GPIF_FLAGB
IO_USB_GPIO_23
IO_USB_GPIF_PKTEND
IO_USB_GPIO_25
IO_USB_GPIO_26
IO_USB_GPIO_27
IO_USB_GPIF_A1
IO_USB_GPIF_A0
Sheet1[11B]
Sheet1[11C]
IO_USB_PMODE0
IO_USB_PMODE1
IO_USB_PMODE2
PS_USB_UART_RTS
PS_USB_UART_CTS
PS_USB_UART_TX
PS_USB_UART_RX
Sheet1[3C]
USB_FLASH_SCK
USB_FLASH_CE
USB_FLASH_SO
USB_FLASH_SI
USB_VIO
R300 10 kOhms 0.1W, 1/10W
R303 10 kOhms 0.1W, 1/10W
GND
VBAT_3.3V
C300 10000pF 16Vdc
USB_VBUS
R301 10 kOhms 0.1W, 1/10W
R302 10 kOhms 0.1W, 1/10W
U3B
CYUSB3011-BZXC
USB_JTAG_TDI
USB_JTAG_TDO
USB_JTAG_TCK
USB_JTAG_TMS
USB_JTAG_TRST
USB_XT_I
USB_XT_O
USB_D_N
USB_D_P
USB_SSTX_N
USB_SSTX_P
USB_SSRX_N
USB_SSRX_P
IO_USB_INT
USB_RESET
Sheet1[11B]
Sheet6[11C]
C306 0.1µF 16Vdc
R304 200 Ohms 0.1W, 1/10W
R305 6.04 kOhms 0.1W, 1/10W
VCC_1.8V
L302 15µH(14uH?) 0.2
VIO5_1.8V
VIO_1.8V
L303 20nH(20uH?) 0.26
CVDD_1.8V
C303 68µF 10
VCC_1.2V
C307 22µF 16
U3TXVDD_1.2V
AVDD_1.2V
VDD_1.2V
U3RXVDD_1.2V
L304 12µH(13uH?) 0.01
L305 12µH(13uH?) 0.01
L306 12µH(13uH?) 0.01
C304 0.1µF 16Vdc
C305 0.1µF 16Vdc
U3C
CYUSB3011-BZXC
CVDDQ
VIO1
VIO2
VIO3
VIO4
VIO5
VDD
AVDD
U3TXVDDQ
U3RXVDDQ
VSS
AVSS
U3VSSQ
C308 - C336
XTAL300
ABM10-19.200MHZ-E20-T
C301 12pF 50Vdc
C302 12pF 50Vdc
U303
IS25WQ040-JNLE
CE#
SO(IO1)
WP#(IO2)
GND
Vcc
HOLD#(IO3)
SCK
SI(IO0)
USB_FLASH_WP
USB_FLASH_HLD
R306 4.99 kOhms 0.1W, 1/10W
R307 4.99 kOhms 0.1W, 1/10W
C337 0.12µF 10Vdc
R308 4.99 kOhms 0.1W, 1/10W
R309 100 kOhms 0.1W, 1/10W
R310 100 Ohms 0.2W, 1/5W
R311 100 Ohms 0.2W, 1/5W
R312 100 Ohms 0.2W, 1/5W
R313 100 Ohms 0.2W, 1/5W
PS_USB_FLASH_CE
PS_USB_FLASH_SO
PS_USB_FLASH_SI
PS_USB_FLASH_SCK
JTAG3
TC2050-IDC
R315 10 kOhms 0.1W, 1/10W
R316 10 kOhms 0.1W, 1/10W
R317 10 kOhms 0.1W, 1/10W
R318 10 kOhms 0.1W, 1/10W
R320 10 kOhms 0.1W, 1/10W
U301A
RCLAMP0524P.TCT
U301B
RCLAMP0524P.TCT
J3_StdB_SSTX_P
J3_StdB_SSTX_N
U302
NUP4114UCLW1T2G
J3_Shield
C310
C311
PS_USB_RESET
R319 100 kOhms 0.1W, 1/10W
R321 1 kOhms 0.1W, 1/10W
L301
TDK_Inductance 1.5µH
J_VBUS
J3
VBUS
D-
D+
GND
StdB_SSTX-
StdB_SSTX+
GND_DRAIN
StdB_SSRX-
StdB_SSRX+
Shield
692221030100
C338 10000pF 250Vdc
C339 0.1µF 100Vdc
R314 10 kOhms 0.25W, 1/4W
Title
Size A1
Number
Revision
Date: 9/09/2025
Sheet of
File: C:\Users\..\Sheet3.SchDoc
Drawn By:

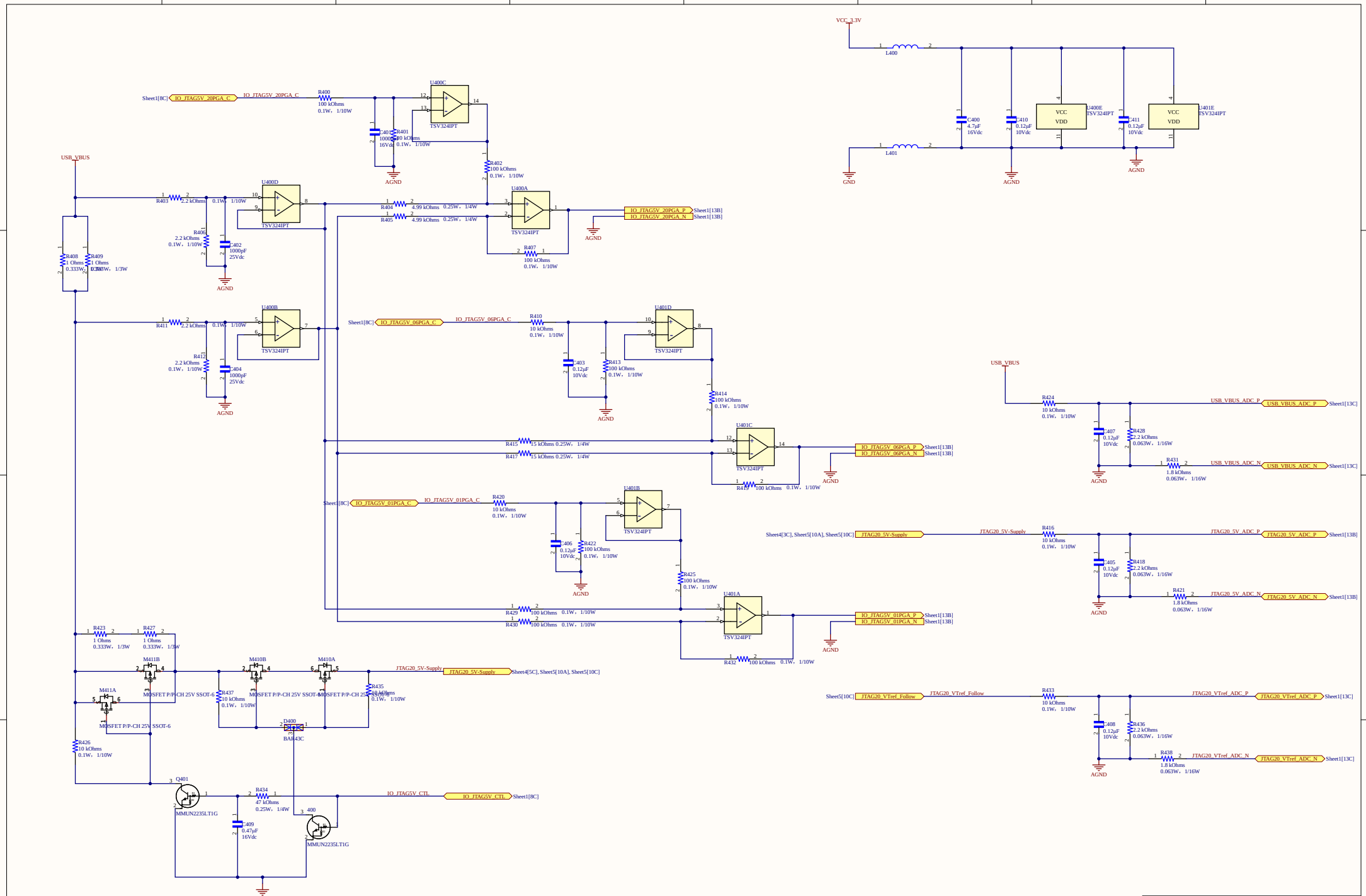
VCC_3.3V
L400
L401
C400 4.7µF 16Vdc
C410 0.12µF 10Vdc
C411 0.12µF 10Vdc
U400E TSV3241PT
U401E TSV3241PT
VCC
VDD
GND
AGND
Sheet1[8C]
IO_JTAG5V_20PGA_C
R400 100 kOhms 0.1W, 1/10W
U400C
TSV3241PT
C401 1000pF 16Vdc
R401 100 kOhms 0.1W, 1/10W
R402 100 kOhms 0.1W, 1/10W
U400A
R404 4.99 kOhms 0.25W, 1/4W
R405 4.99 kOhms 0.25W, 1/4W
R407 100 kOhms 0.1W, 1/10W
IO_JTAG5V_20PGA_P
IO_JTAG5V_20PGA_N
Sheet1[13B]
USB_VBUS
R403 2.2 kOhms 0.1W, 1/10W
U400D
R406 2.2 kOhms 0.1W, 1/10W
C402 1000pF 25Vdc
R408 1 Ohms 0.333W, 1/3W
R409 1 Ohms 0.333W, 1/3W
R411 2.2 kOhms 0.1W, 1/10W
U400B
R412 2.2 kOhms 0.1W, 1/10W
C404 1000pF 25Vdc
IO_JTAG5V_06PGA_C
R410 10 kOhms 0.1W, 1/10W
U401D
C403 0.12µF 10Vdc
R413 100 kOhms 0.1W, 1/10W
R414 100 kOhms 0.1W, 1/10W
U401C
R415 15 kOhms 0.25W, 1/4W
R417 15 kOhms 0.25W, 1/4W
R419 100 kOhms 0.1W, 1/10W
IO_JTAG5V_06PGA_P
IO_JTAG5V_06PGA_N
IO_JTAG5V_01PGA_C
R420 10 kOhms 0.1W, 1/10W
U401B
C406 0.12µF 10Vdc
R422 100 kOhms 0.1W, 1/10W
R425 100 kOhms 0.1W, 1/10W
U401A
R429 100 kOhms 0.1W, 1/10W
R430 100 kOhms 0.1W, 1/10W
R432 100 kOhms 0.1W, 1/10W
IO_JTAG5V_01PGA_P
IO_JTAG5V_01PGA_N
R424 10 kOhms 0.1W, 1/10W
C407 0.12µF 10Vdc
R428 2.2 kOhms 0.063W, 1/16W
R431 1.8 kOhms 0.063W, 1/16W
USB_VBUS_ADC_P
USB_VBUS_ADC_N
Sheet4[3C], Sheet5[10A], Sheet5[10C]
JTAG20_5V-Supply
R416 10 kOhms 0.1W, 1/10W
C405 0.12µF 10Vdc
R418 2.2 kOhms 0.063W, 1/16W
R421 1.8 kOhms 0.063W, 1/16W
JTAG20_5V_ADC_P
JTAG20_5V_ADC_N
R423 1 Ohms 0.333W, 1/3W
R427 1 Ohms 0.333W, 1/3W
M411B
M411A
M410B
M410A
MOSFET P/P-CH 25V SSOT-6
R437 10 kOhms 0.1W, 1/10W
R435 10 kOhms 0.1W, 1/10W
D400 BAR43C
R426 10 kOhms 0.1W, 1/10W
Q401 MMUN2235LT1G
R434 47 kOhms 0.25W, 1/4W
C409 0.47µF 16Vdc
400 MMUN2235LT1G
IO_JTAG5V_CTL
Sheet5[10C]
JTAG20_VTref_Follow
R433 10 kOhms 0.1W, 1/10W
C408 0.12µF 10Vdc
R436 2.2 kOhms 0.063W, 1/16W
R438 1.8 kOhms 0.063W, 1/16W
JTAG20_VTref_ADC_P
JTAG20_VTref_ADC_N
Title
Size A2
Number
Revision
Date: 9/09/2025
Sheet of
File: C:\Users\..\Sheet4.SchDoc
Drawn By:

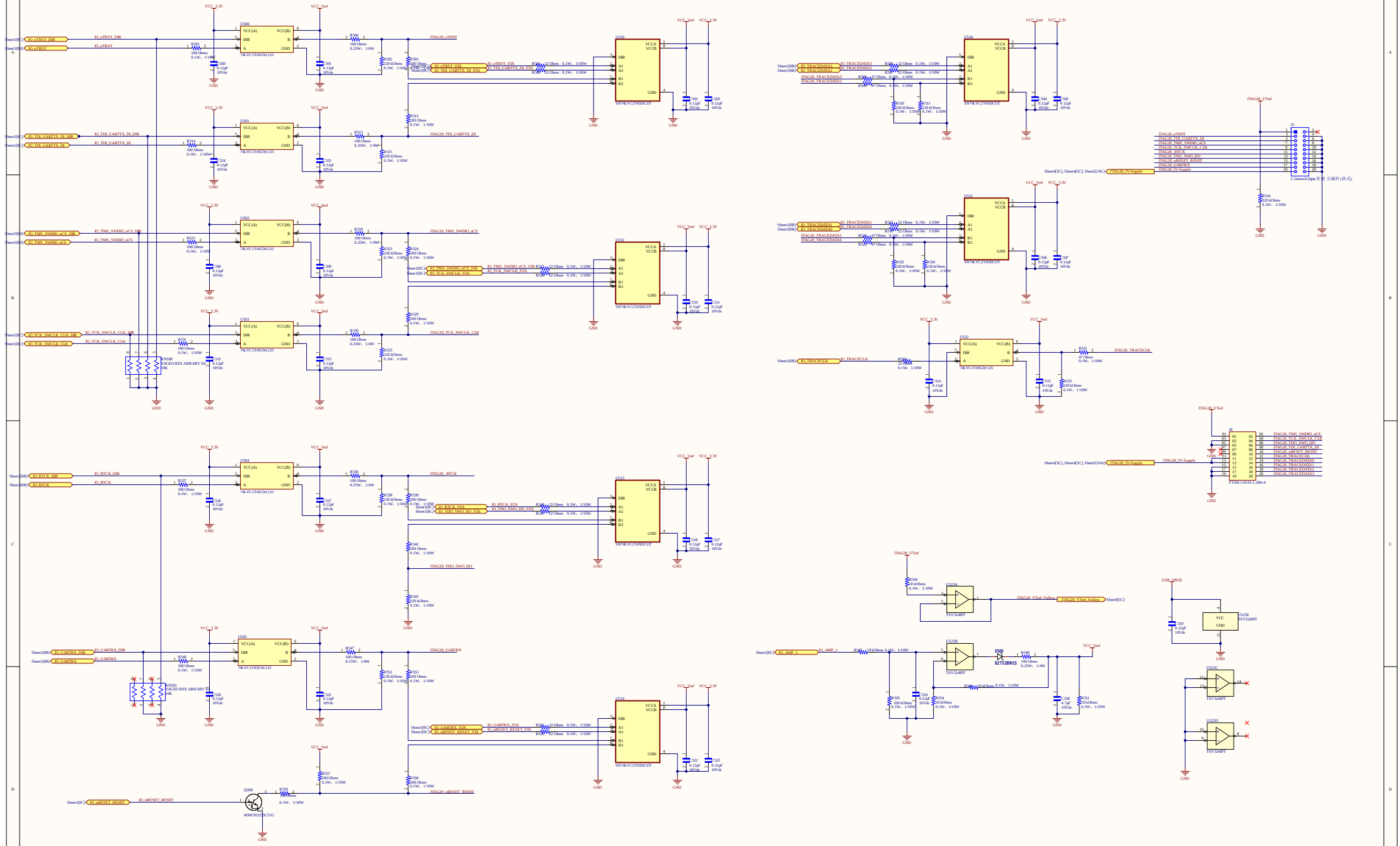
U500
74LVC1T45GW125
U501
74LVC1T45GW125
U502
74LVC1T45GW125
U503
74LVC1T45GW125
U504
74LVC1T45GW125
U505
74LVC1T45GW125
U510
SN74LVC2T45DCUT
U512
SN74LVC2T45DCUT
U513
SN74LVC2T45DCUT
U514
SN74LVC2T45DCUT
U520
SN74LVC2T45DCUT
U521
SN74LVC2T45DCUT
U522
74LVC1T45GW125
U523A
TSV3240PT
U523B
TSV3240PT
U523C
TSV3240PT
U523D
TSV3240PT
U523E
TSV3240PT
RN500
VAGEO RES ARRARY X4
10K
RN501
VAGEO RES ARRARY X4
10K
Q500
MMUN2214LT1G
D500
BZT52B9V15
J5
2.54mmX10pin 针座 公插针(弯式)
J6
FTSH-110-01-L-DH-A
VCC_3.3V
VCC_Vref
GND
JTAG20_VTref
USB_VBUS
JTAG20_nTRST
JTAG20_TMS_SWDIO_eCS
JTAG20_TCK_SWCLK_CLK
JTAG20_RTCK
JTAG20_TDO_SWO_DO
JTAG20_TDI_UARTTX_DI
JTAG20_nRESET_RESET
JTAG20_UARTRX
JTAG20_TRACEDATA3
JTAG20_TRACEDATA2
JTAG20_TRACEDATA1
JTAG20_TRACEDATA0
JTAG20_TRACECLK
JTAG20_VTref_Follow
JTAG20_5V-Supply
IO_AMP_1
IO_nTRST_DIR
IO_nTRST
IO_TDI_UARTTX_DI_DIR
IO_TDI_UARTTX_DI
IO_TMS_SWDIO_eCS_DIR
IO_TMS_SWDIO_eCS
IO_TCK_SWCLK_CLK_DIR
IO_TCK_SWCLK_CLK
IO_RTCK_DIR
IO_RTCK
IO_UARTRX_DIR
IO_UARTRX
IO_nRESET_RESET
IO_nTRST_STA
IO_TDI_UARTTX_DI_STA
IO_TMS_SWDIO_eCS_STA
IO_TCK_SWCLK_STA
IO_RTCK_STA
IO_TDO_SWO_DO_STA
IO_UARTRX_STA
IO_nRESET_RESET_STA
IO_TRACEDATA3
IO_TRACEDATA2
IO_TRACEDATA1
IO_TRACEDATA0
IO_TRACECLK
Sheet1[B]
Sheet1[C]
Sheet3[C], Sheet4[5C], Sheet5[10C]
Sheet4[5C], Sheet5[10A]
Sheet4[5C]
Title
Size
A1
Number
Revision
Date: 9/09/2025
Sheet of
File: C:\Users...\Sheet5.SchDoc
Drawn By:

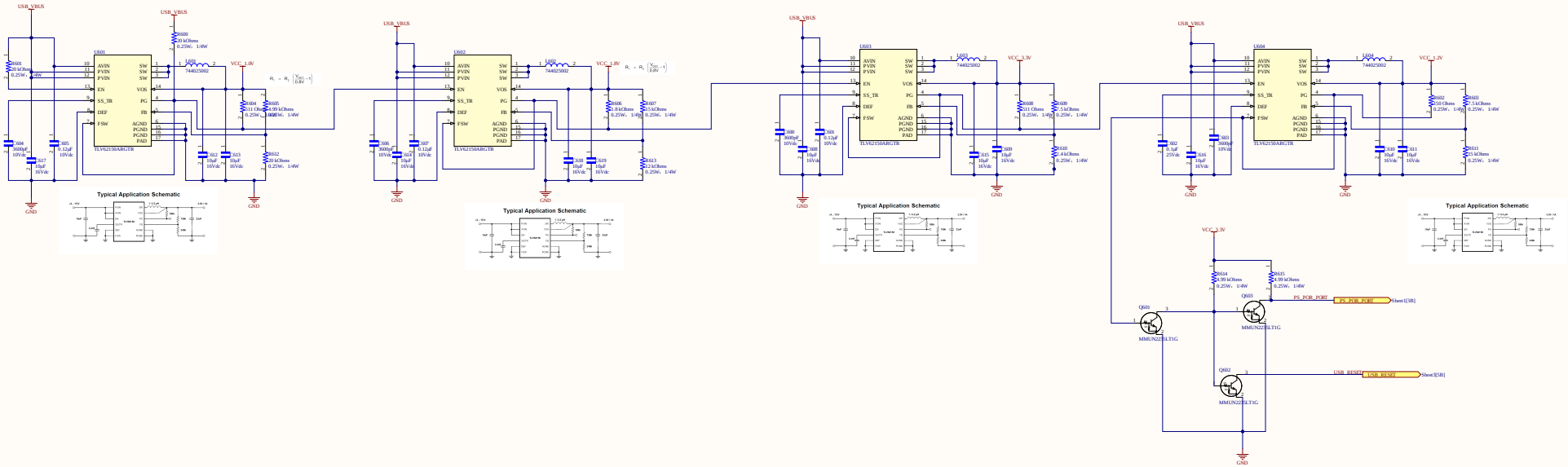

Title			
Size A1	Number		Revision
Date: 9/09/2025		Sheet of	
File: C:\Users...\Sheet6.SchDoc		Drawn By:	