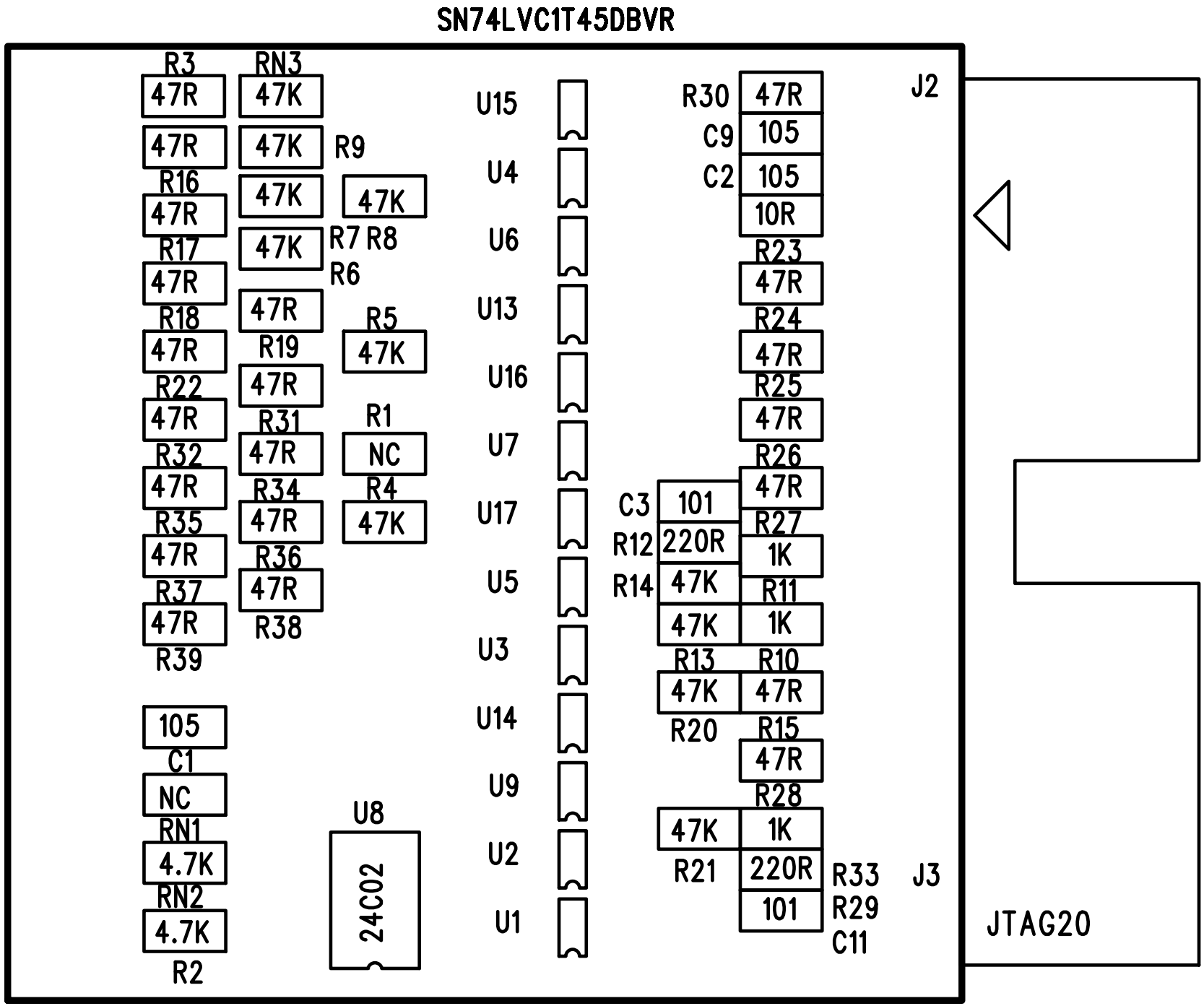

JTAG_PORT_V312.pcb - Tue Jul 27 14:43:11 2021