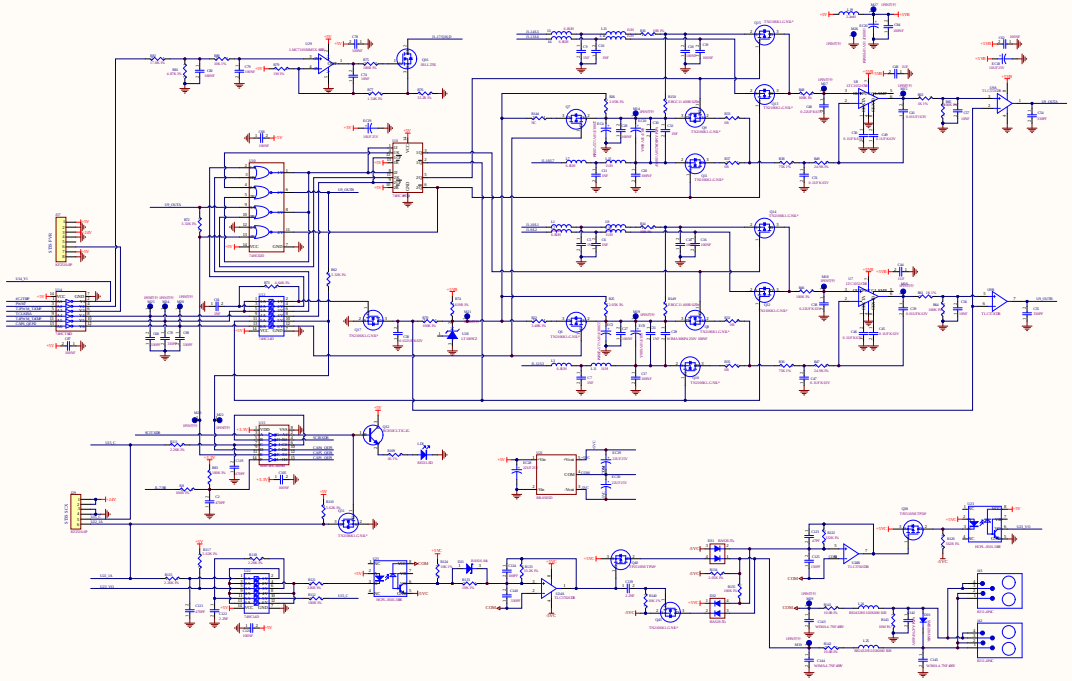

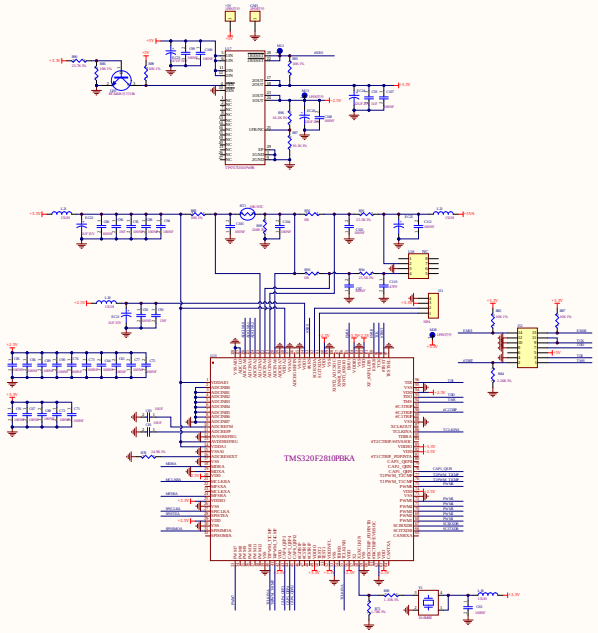

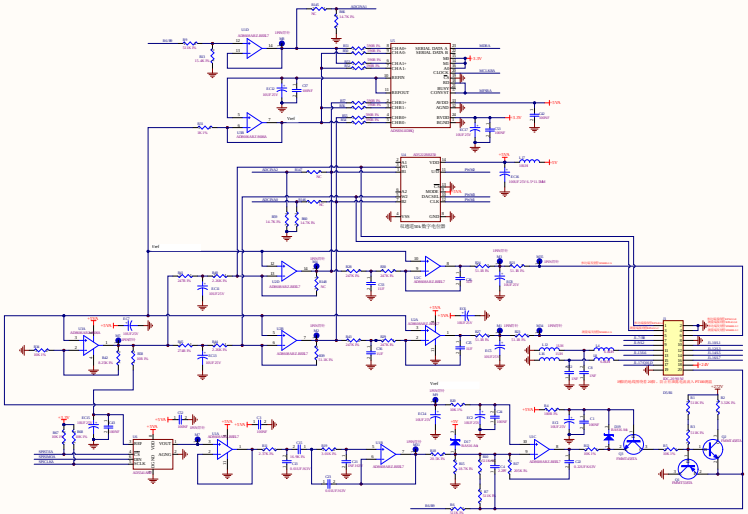

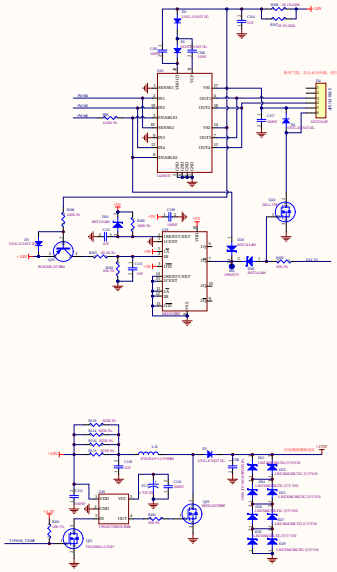

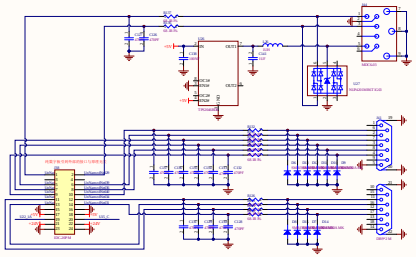

Title			
Size	Number		Revision
A0			
Date:	5/18/2010	Sheet of	
File:	D:\PROJECTS\TMS320F2810*.SCH*.PRJPCB	Drawn By:	