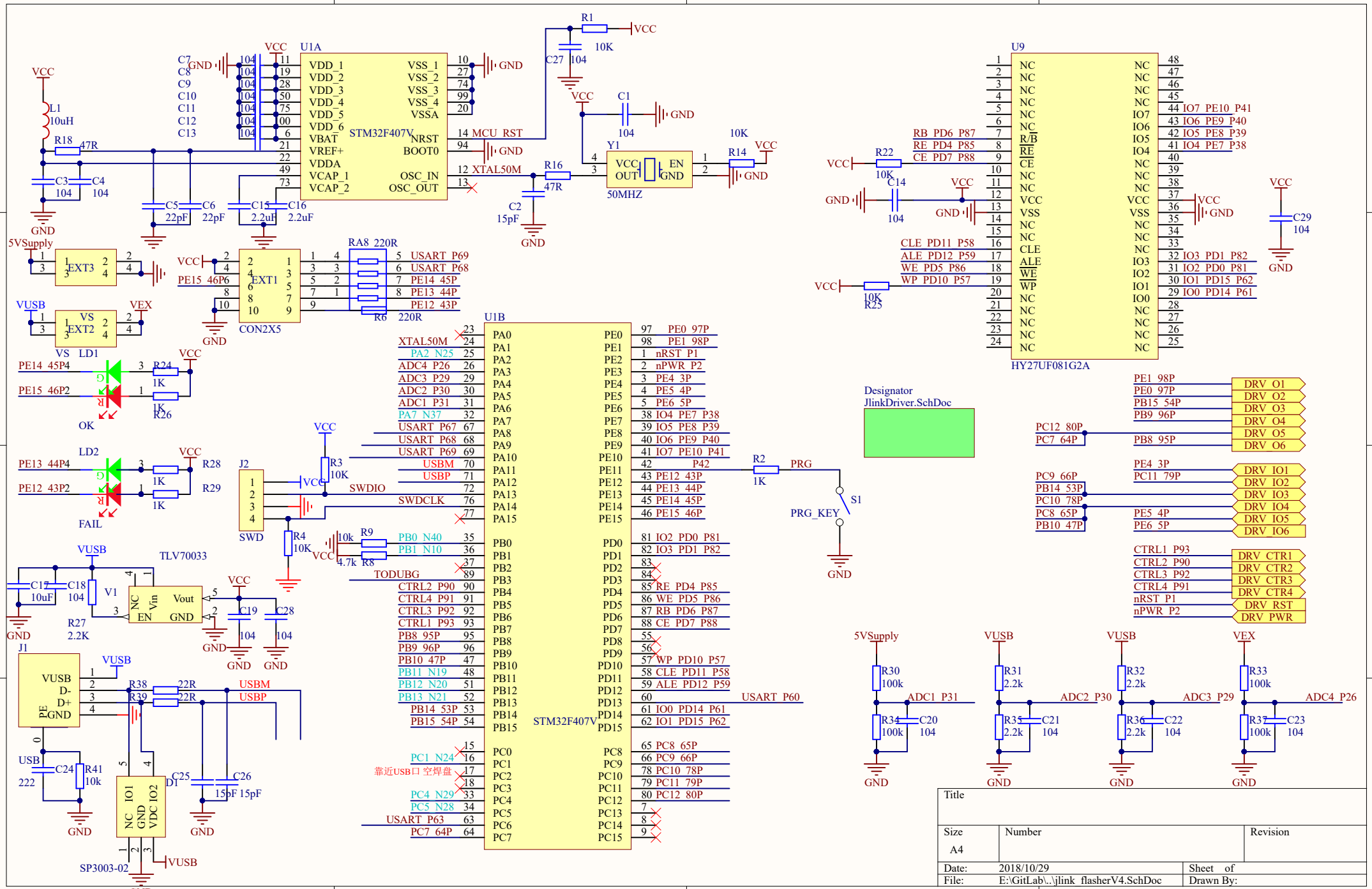
U1A
STM32F407V
VDD_1
VDD_2
VDD_3
VDD_4
VDD_5
VDD_6
VBAT
VREF+
VDDA
VCAP_1
VCAP_2
VSS_1
VSS_2
VSS_3
VSS_4
VSSA
NRST
BOOT0
OSC_IN
OSC_OUT
MCU_RST
XTAL50M
U1B
STM32F407V
U9
HY27UF081G2A
Y1
50MHZ
EXT3
EXT1
EXT2
CON2X5
RA8 220R
R6 220R
LD1
OK
LD2
FAIL
J2
SWD
SWDIO
SWDCLK
TLV70033
J1
SP3003-02
USBM
USBP
PRG
PRG_KEY
S1
Designator
JlinkDriver.schDoc
DRV_O1
DRV_O2
DRV_O3
DRV_O4
DRV_O5
DRV_O6
DRV_IO1
DRV_IO2
DRV_IO3
DRV_IO4
DRV_IO5
DRV_IO6
DRV_CTR1
DRV_CTR2
DRV_CTR3
DRV_CTR4
DRV_RST
DRV_PWR
ADC1_P31
ADC2_P30
ADC3_P29
ADC4_P26
USART_P60
靠近USB口 空焊盘
Title
Size
A4
Number
Revision
Date: 2018/10/29
Sheet of
File: E:\GitLab\..\jlink_flasherV4.SchDoc
Drawn By:

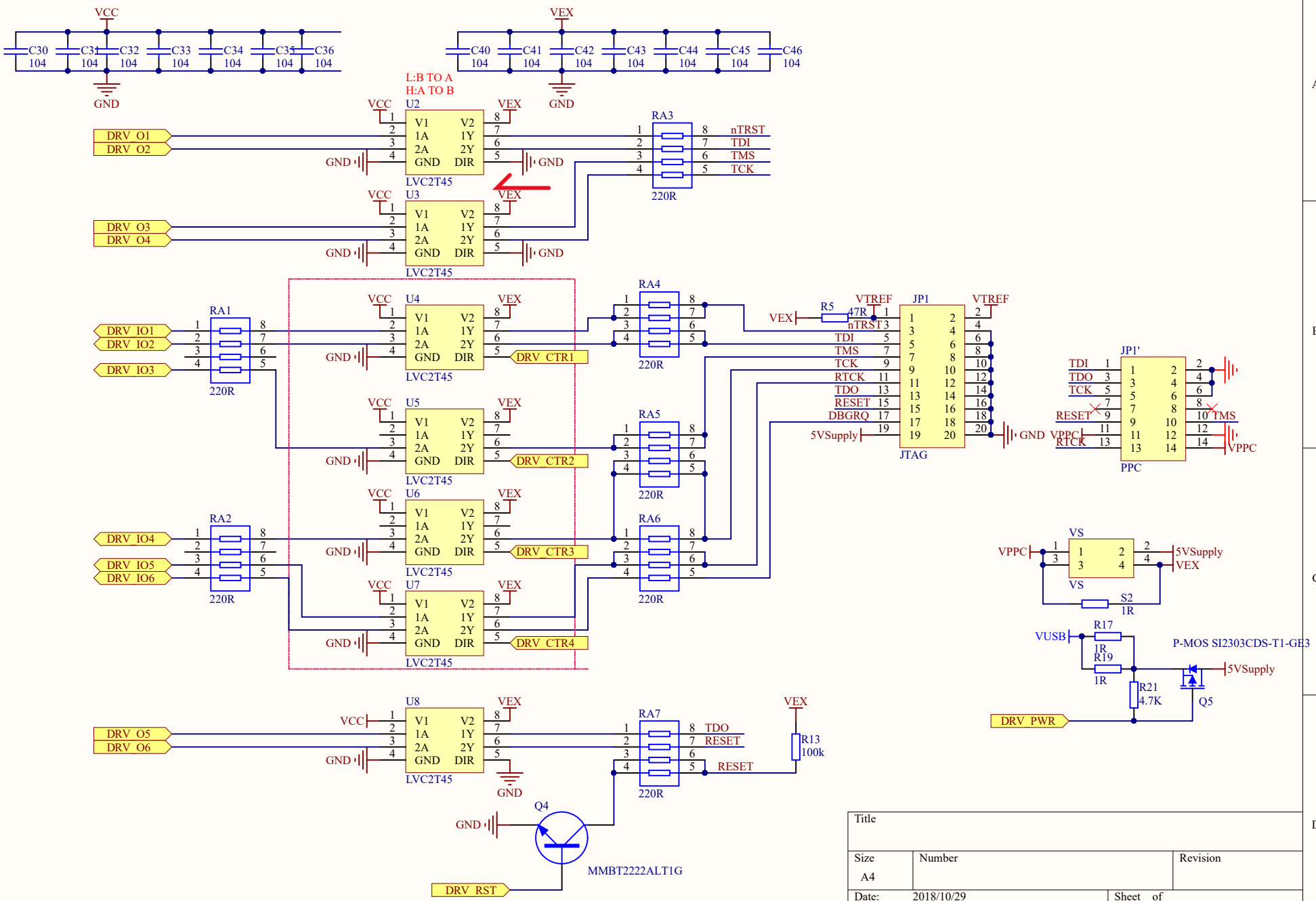


| Title | | |
|---|---|---|
| Size A4 | Number | Revision |
| Date: 2018/10/29 | | Sheet of |
| File: E:\GitLab\..\JlinkDriver.SchDoc | | Drawn By: |